MOTOR SPECS/PERFORMANCE DATA	
MODEL NUMBER	YXN5684D-A
HP	2.0
VOLT	208-230/460
PHASE	3
HZ	60
RATED SPEED	1740 RPM
FLA (@460VOLTS)	3.0 AMPS
FRAME	145TC
ENCLOSURE	TEFC
IP RATING	55
INS CLASS	F
EFFICIENCY	85%
POWER FACTOR	.78
FULL LOAD TORQUE	8.2 Nm(6.0 ft-Lbs)
MAX TORQUE	23 Nm (16.98 ft-Lbs)
START AMPERAGE	22 Amps
SERVICE FACTOR	1.15
RATING @	40 °C AMBIENT
USABLE AMPS @208V	5.20
LOCKED ROTOR CODE	K
NEMA DESIGN CODE	B
LR KVA CODE	K
NO LOAD CURRENT	1.8 AMPS
LINE-LINE RESIST@25C	7 OHMS
TEMP RISE C@FL	65°C
LOCKED ROTOR TORQ	26.5 Nm (19.55 ft-lbs)
TEMP RISE @SF LOAD	75°C
SHIPPING WEIGHT (LBS)	49
DUTY	CONTINUOUS

REVISIONS					
REV	ECO. NO.	DESCRIPTION	DWN/DATE	CHK/DATE	APVD/DATE
A	XX	RELEASE FOR WEBSITE	P.D.K. 04/28/10		

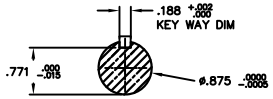

SECTION A-A

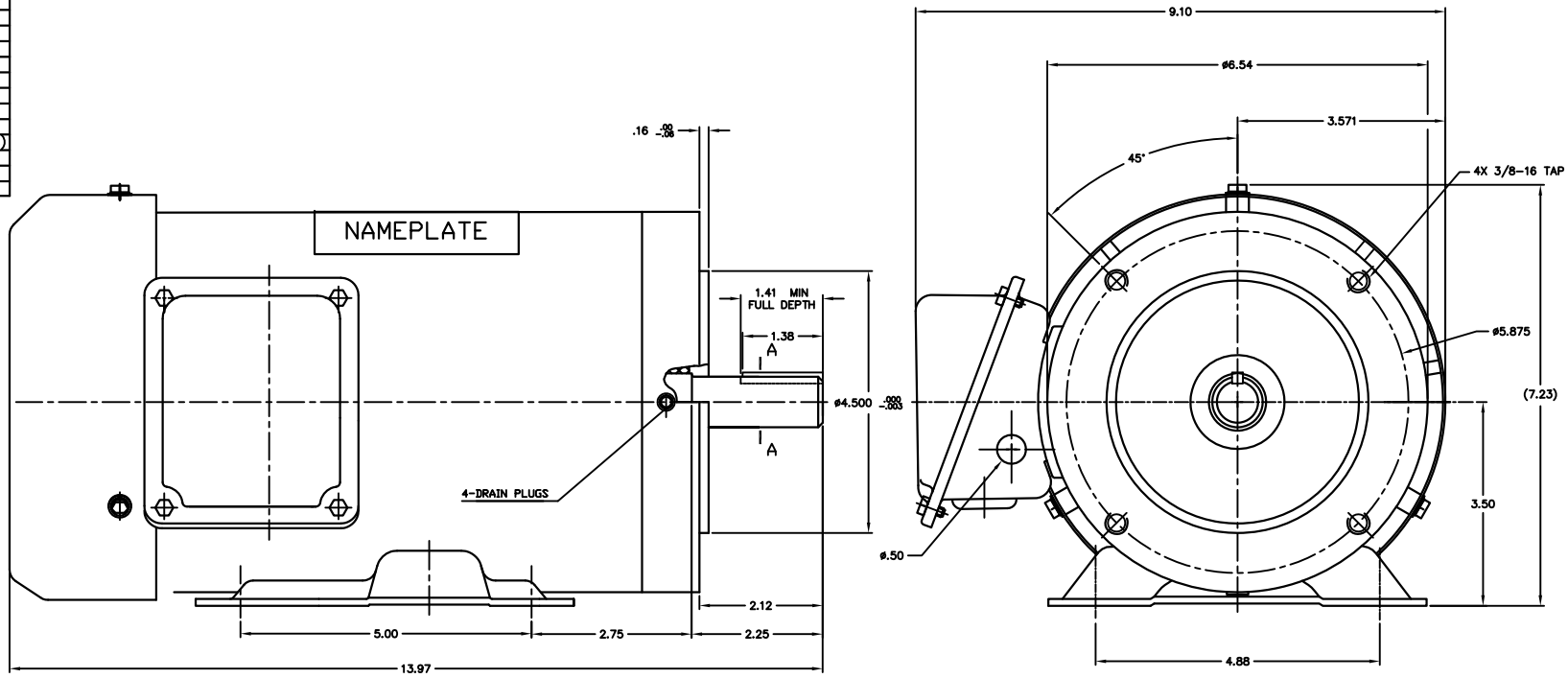

WIRING DIAGRAM

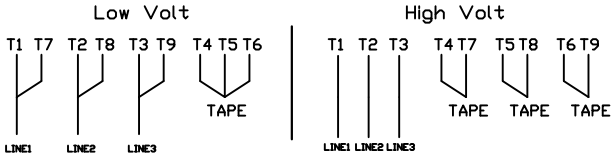

NOTE: TO REVERSE ROTATION, INTERCHANGE ANY TWO LEADS

3. INTERPRET ABBREVIATIONS PER ANSI Y1.1.
2. INTERPRET DIMENSIONS AND TOLERANCES PER ANSI Y14.5M.
1. INTERPRET DRAWING PER ANSI Y14.3.

NOTES:

NOTICE: CONFIDENTIAL INFORMATION
THIS DOCUMENT IS THE PROPERTY OF SMC AND SHALL NOT BE COPIED, REPRODUCED OR USED AS THE BASIS FOR SALE OR MANUFACTURE OF APPARATUS OR DEVICES WITHOUT WRITTEN PERMISSION.

APPLICABLE SPECIFICATIONS	UNLESS OTHERWISE SPECIFIED DIMENSIONS ARE IN INCHES/MM TOLERANCES	APPROVALS: SIGNATURE / DATE	SMC North America	P.O. BOX 43025 LITHONIA, GA. 30058-3025 PHONE (800) 762-7860 FAX (800) 762-1942 WWW.SMCMOTOR.COM
		DRAWN BY: Phillip Keller 11/18/09	MOTOR, 2 HP, SS, 3 PH, 145TC, FOOTED, YXN5684D-A	
		CHECKED BY:	SIZE D / PART NO. 002849-06 / DRAWING NO. 002849-06 / REV A	
MATERIAL N/A		APPROVED BY:		
PROTECTIVE/DECORATIVE FINISH N/A		FILENAME: WS002849-06DA	SCALE 1/1 / DO NOT SCALE DRAWING / SHEET 1 OF 1	