MOTOR SPECS/PERFORMANCE DATA	
MODEL NUMBER	YXN5624D
HP	.33
VOLT	208-230/460
PHASE	3
HZ	60
RATED SPEED	1740 RPM
FLA (@460VOLTS)	.55 AMPS
FRAME	56C
ENCLOSURE	TENV
IP RATING	55
INS CLASS	F
EFFICIENCY	78%
POWER FACTOR	.66
FULL LOAD TORQUE	1.35 Nm (.996 ft-Lbs)
MAX TORQUE	5.8 Nm (4.28 ft-Lbs)
START AMPS (@460V)	4.8 AMPS
SERVICE FACTOR	1.15
RATING @	40 °C AMBIENT
USABLE AMPS @208V	1.08
LOCKED ROTOR CODE	M
NEMA DESIGN CODE	B
LR KVA CODE	M
NO LOAD CURRENT	0.5 AMPS
LINE-LINE RESIST@25C	38 OHMS
TEMP RISE C@FL	45°C
LOCKED ROTOR TORQ	4.5 Nm (3.32 ft-lbs)
TEMP RISE @SF LOAD	52°C
SHIPPING WEIGHT (LBS)	33
DUTY	CONTINUOUS

REVISIONS					
REV	ECO. NO.	DESCRIPTION	DWN/DATE	CHK/DATE	APVD/DATE
A	XX	RELEASE FOR WEBSITE	P.D.K. 04/28/10		

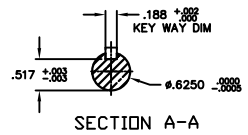

SECTION A-A

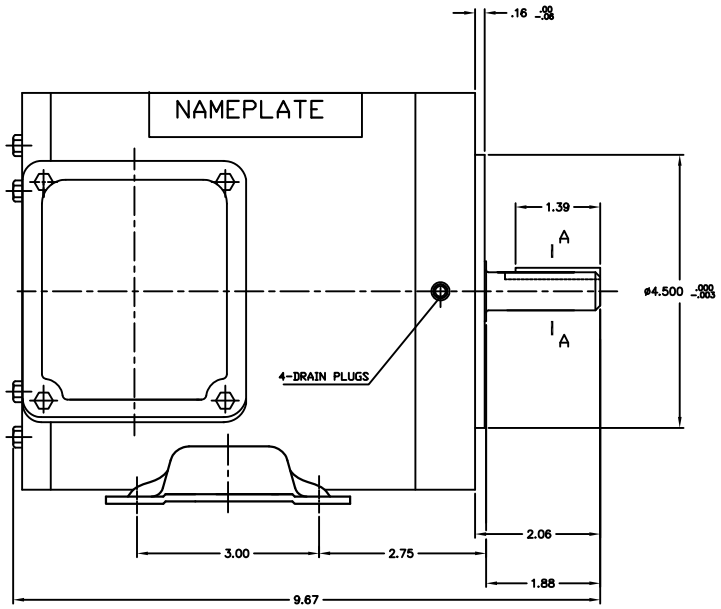

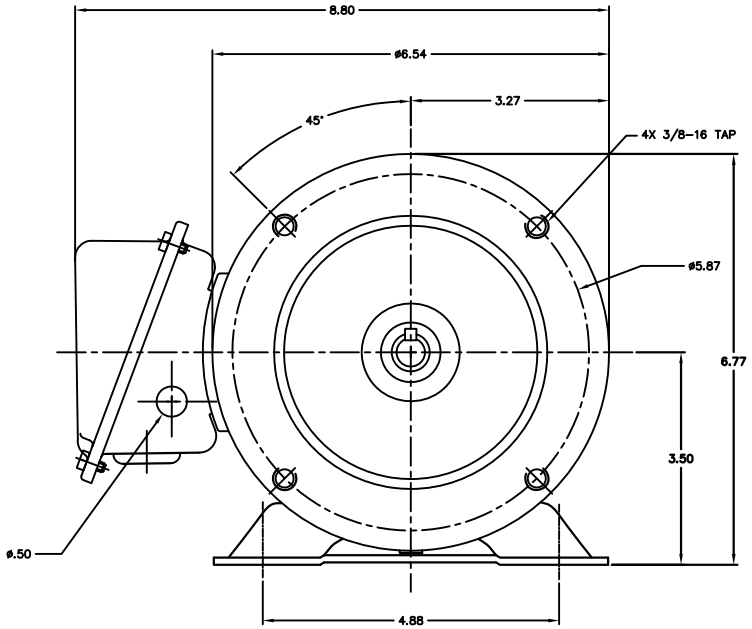

WIRING DIAGRAM

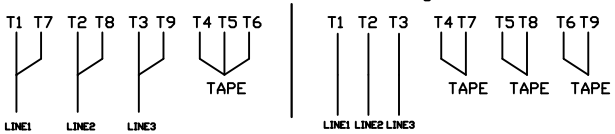

NOTE: TO REVERSE ROTATION, INTERCHANGE ANY TWO LEADS

3. INTERPRET ABBREVIATIONS PER ANSI Y1.1.
2. INTERPRET DIMENSIONS AND TOLERANCES PER ANSI Y14.5M.
1. INTERPRET DRAWING PER ANSI Y14.3.

NOTES:

NOTICE: CONFIDENTIAL INFORMATION
THIS DOCUMENT IS THE PROPERTY OF SMC AND SHALL NOT BE COPIED, REPRODUCED OR USED AS THE BASIS FOR SALE OR MANUFACTURE OF APPARATUS OR DEVICES WITHOUT WRITTEN PERMISSION.

APPLICABLE SPECIFICATIONS	UNLESS OTHERWISE SPECIFIED DIMENSIONS ARE IN INCHES/MM TOLERANCES	APPROVALS / SIGNATURE / DATE	SMC North America — P.O. BOX 43004, LITTLETON, CO. 80123-4004 PHONE (303) 799-1000 FAX (303) 799-1010
		DRAWN BY: Phillip Keller 11/19/09	MOTOR, 1/3 HP, SS, 3 PH, 56C, FOOTED, YXN5624D
		CHECKED BY:	SIZE D · PART NO. 002848-04 · DRAWING NO. 002848-04 · REV A
MATERIAL N/A		APPROVED BY:	SCALE 1/1 · DO NOT SCALE DRAWING · SHEET 1 OF 1
PROTECTIVE/DECORATIVE FINISH N/A		FILENAME: WS002848-04DA	