MOTOR SPECS/PERFORMANCE DATA	
MODEL NUMBER	YXN5674
HP	1.5
VOLT	208–230/460
PHASE	3
HZ	60
RATED SPEED	1740 RPM
FLA (@460VOLTS)	2.4 AMPS
FRAME	56C
ENCLOSURE	TEFC
IP RATING	55
INS CLASS	F
EFFICIENCY	84%
POWER FACTOR	.74
FULL LOAD TORQUE	6.03 Nm (4.45 ft–Lbs)
MAX TORQUE	21.5 Nm (15.86 ft–Lbs)
START AMPERAGE	18 Amps
SERVICE FACTOR	1.15
RATING @	40 °C AMBIENT
USABLE AMPS @208V	4.20
LOCKED ROTOR CODE	L
NEMA DESIGN CODE	B
LR KVA CODE	L
NO LOAD CURRENT	1.5 AMPS
LINE–LINE RESIST@25C	8 OHMS
TEMP RISE C@FL	48°C
LOCKED ROTOR TORQ	16 Nm (11.9 ft–lbs)
TEMP RISE @SF LOAD	60°C
SHIPPING WEIGHT (LBS)	48
DUTY	CONTINUOUS

REVISIONS					
REV	ECO. NO.	DESCRIPTION	DWN/DATE	CHK/DATE	APVD/DATE
A	XX	RELEASE FOR WEBSITE	P.D.K. 04/28/10		

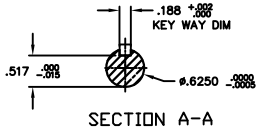

SECTION A-A

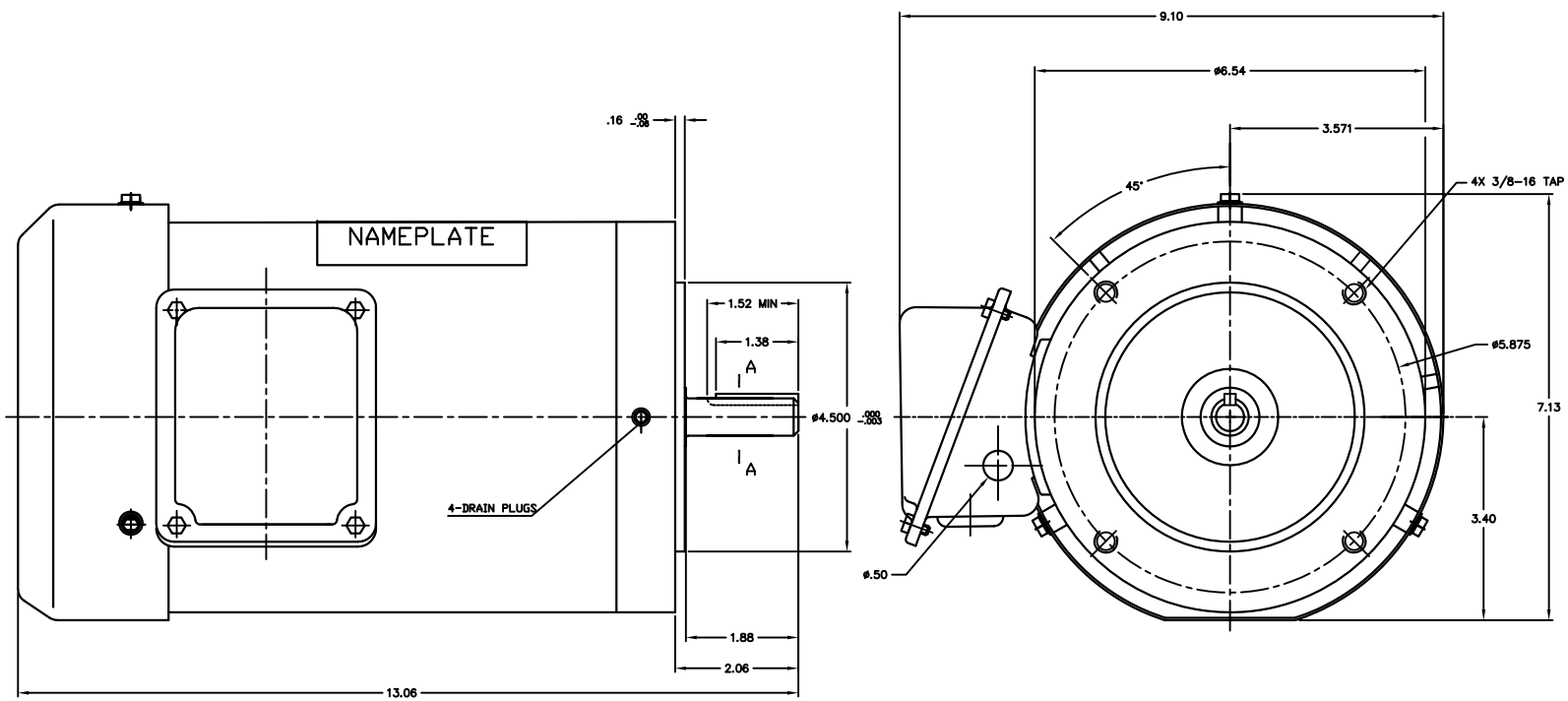

WIRING DIAGRAM

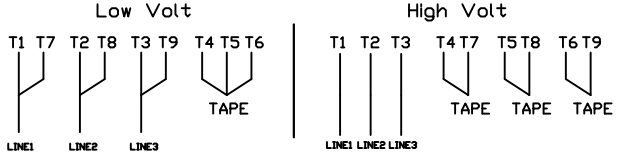

NOTE: TO REVERSE ROTATION, INTERCHANGE ANY TWO LEADS

3. INTERPRET ABBREVIATIONS PER ANSI Y1.1.
2. INTERPRET DIMENSIONS AND TOLERANCES PER ANSI Y14.5M.
1. INTERPRET DRAWING PER ANSI Y14.3.

NOTES:

NOTICE: CONFIDENTIAL INFORMATION
THIS DOCUMENT IS THE PROPERTY OF SMC AND WILL NOT BE COPIED, REPRODUCED OR USED AS THE BASIS FOR SALE OR MANUFACTURE OF APPARATUS OR DEVICES WITHOUT WRITTEN PERMISSION.

APPLICABLE SPECIFICATIONS	UNLESS OTHERWISE SPECIFIED DIMENSIONS ARE IN INCHES/MM TOLERANCES	APPROVALS SIGNATURE	DATE	SMC North America	P.O. BOX 43991 LITTLETON, CO. 80162-1991 PHONE (303) 470-1200 FAX (303) 470-0500
		DRAWN BY: Phillip Keller	11/10/09	MOTOR, 1.5 HP, SS, 3 PH, 56C, YXN5674	
		CHECKED BY:			
MATERIAL N/A		APPROVED BY:		SIZE D	PART NO. 002847-03 / DRAWING NO. 002847-03 / REV A
PROTECTIVE/DECORATIVE FINISH N/A		FILENAME:WS002847-03DA		SCALE 1/1	DO NOT SCALE DRAWING / SHEET 1 OF 1